4.11 **Lista parti di ricambio** *4.11* ***Spare parts list*** 4.11 **Ersatzteilliste**

HA - HF

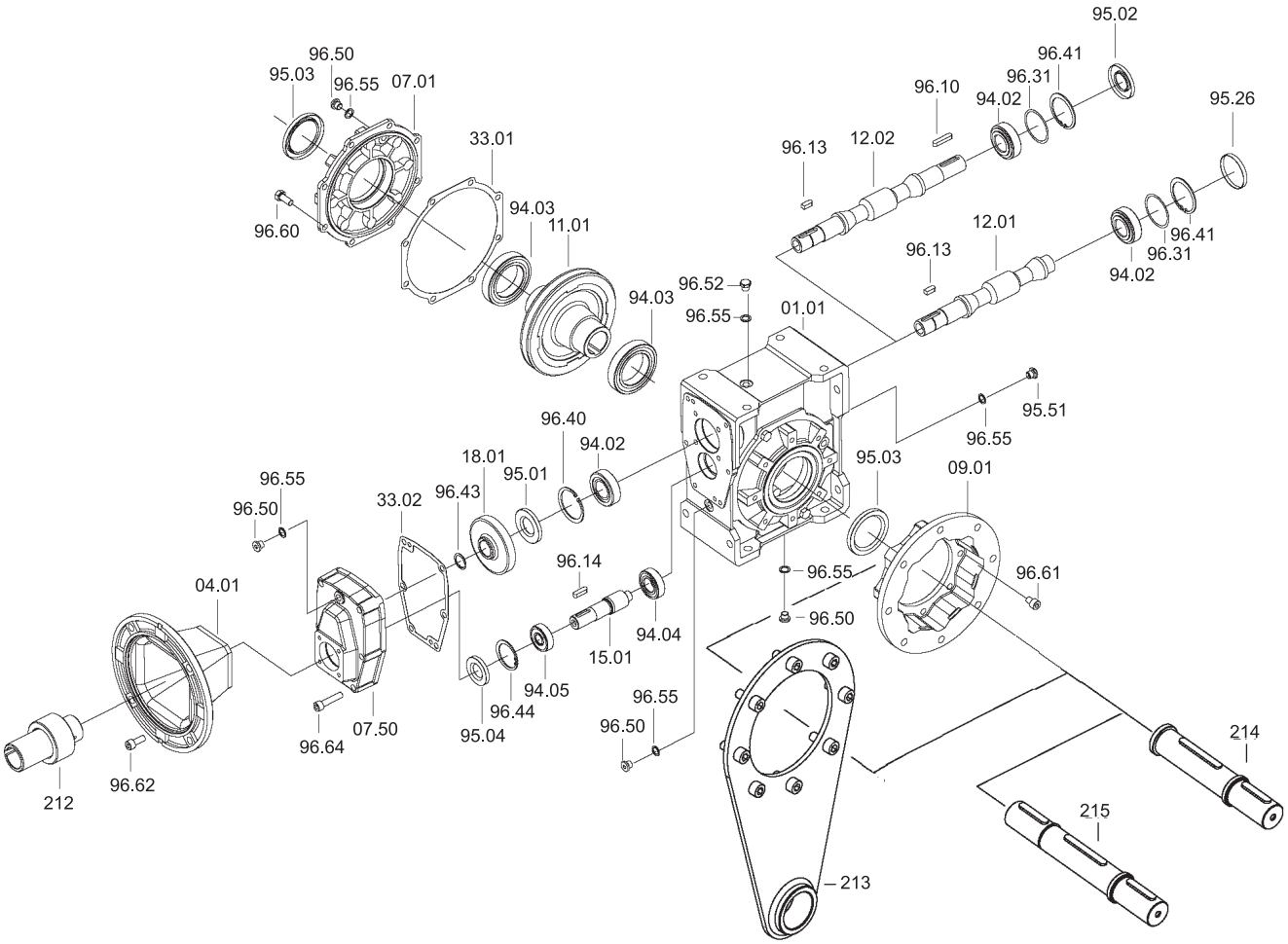

H	Cuscinetti / *Bearings* / Lager					Anelli di tenuta / Oilseals Öldichtungen				Cappellotto / *Closed oil seal* Geschlossene Öldichtung
	94.02	**94.03**		**94.04**	**94.05**	**95.01**	**95.02**	**95.03**	**95.04**	**95.26**
40	**6201** 12x32x10	**6006** 30x55x13	***32006** 30x55x17	**6000** 10x26x8	**6000** 10x26x8	12/32/7	12/32/7	30/47/7	10/26/7	ø 32x7
50	**6203** 17x40x12	**6008** 40x68x15	***32008** 40x68x19	**6200** 10x30x9	**6201** 12x32x10	17/40/7	17/40/7	40/62/8	12/32/7	ø 40x7
63	**30204** 20x47x15.25	**6008** 40x68x15	***32008** 40x68x19	**6201** 12x32x10	**6203** 17x40x12	20/47/7	20/47/7	40/62/8	17/40/7	ø 47x7
75	**30205** 25x52x16.25	**6010** 50x80x16	***32010** 50x80x20	**6202** 15x35x11	**6204** 20x47x14	25/52/7	25/52/7	50/72/8	20/47/7	ø 52x7
90	32205 25x52x19.25	**6010** 50x80x16	***32010** 50x80x20	**6202** 15x35x11	**6204** 20x47x14	25/52/7	25/52/7	50/72/8	20/47/7	ø 52x7
110	**32206B** 30x62x21.25	**6012** 60x95x18	***32012** 60x95x23	**6303** 17x47x14	**6205** 25x52x15	30/62/7	30/62/7	60/85/8	25/52/7	ø 62x7
130	**33208** 40x80x32	**6015** 75x115x20	***32015** 75x115x25	**6304** 20x52x15	**6305** 25x62x17	40/80/10	40/80/10	75/100/10	25/62/8	ø 80x10

* Cuscinetti a rulli conici a richiesta - Tapered roller bearings on request - Auf Wunsch Kegelrollenlager